HOROW®

Installation & User Manual

HOROW T36

Smart Toilet

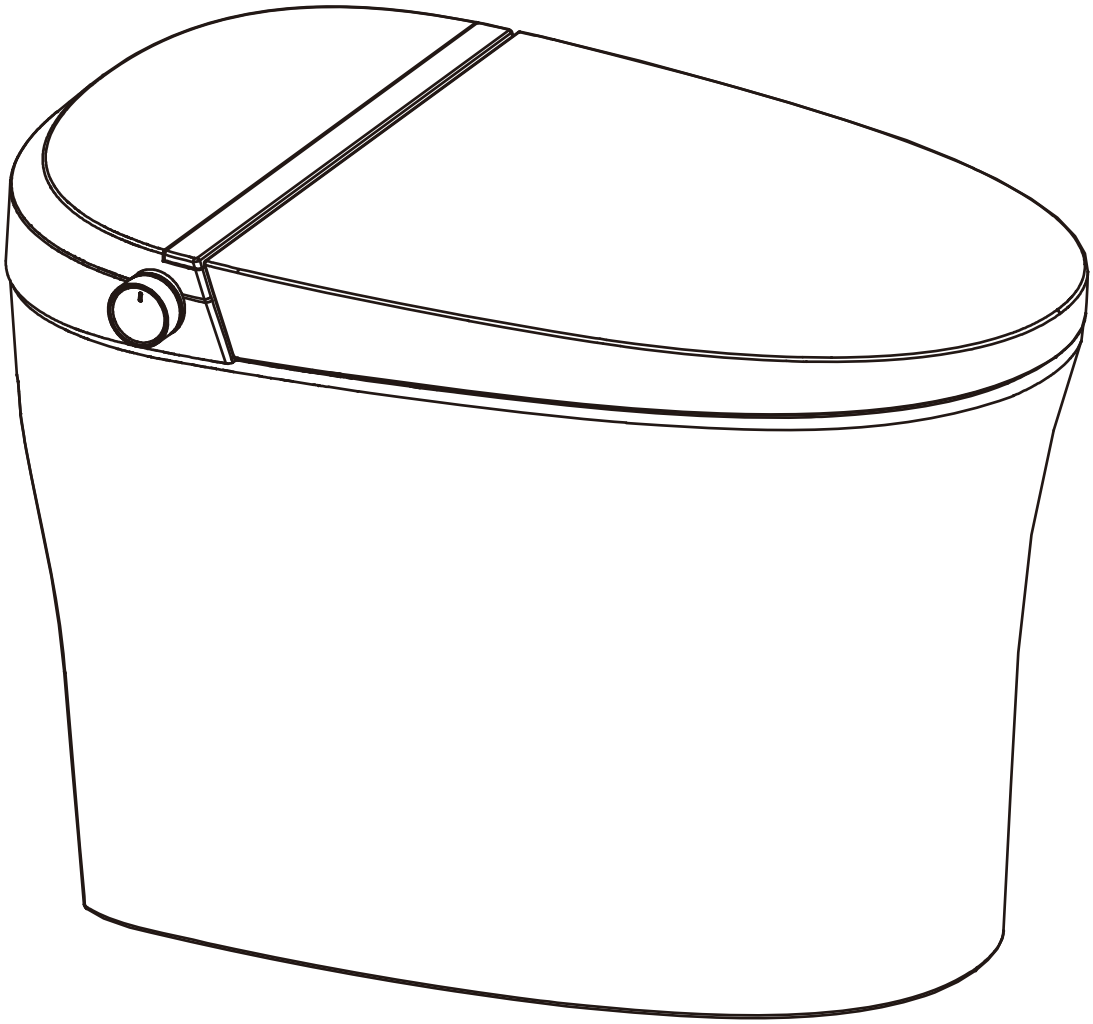

Contents

Important Safeguards 1
- Important Information 1
- Grounding Instructions 2
- Explanation of Terms and Symbols 2

Overall Sketch 8

Function Table 9

Product Installation 10
- Tools Needed for Installation 10
- Parts Included 10
- Prior to Installation 11
- Installation of Smart Toilet 12
- Installation of Battery Pack 16
- Installation of Remote Control Holder 17
- Product Test Run 18

Usage Instructions 19
- Function Explanations 19
- Foot Sensor Operations 21
- Knob Operations 22
- Remote Control Operations 23

Daily Maintenance 26
- Maintenance of Ceramics, Seat and Lid 26
- Maintenance of the Nozzle 27
- Maintenance During Winter Season 28

Troubleshooting 29

Specifications 33

Warranty 34

- Thank You for Choosing HOROW. Please read the instructions carefully before installation and keep it available for future maintenance or reference.
- We are not responsible for the accidents resulting from the user's negligence.
- HOROW reserves the right to make revisions to this manual without notice.

Need help? Contact HOROW Customer Service Team.

Phone: (+1)209-200-8033 **Monday to Friday**
Email: support@horow.com

Important Safeguards

Read All Instructions Before Using

Important Information

When using electrical products, especially when children are present, basic safety precautions should always be followed, including the following:

DANGER - To reduce the risk of electrocution:

1. Do not use while bathing.
2. Do not place or store product where it can fall or be pulled into a tub or sink.
3. Do not place in or drop into water or other liquid.
4. Do not reach for a product that has fallen into water. Unplug it immediately.
5. Do not wash the main unit or electrical plug with water or detergent.
6. During installation, disassembly, repair and maintenance of the product, the power plug must be switched off and the water supply be shut off.

WARNING - To reduce the risk of burns, electrocution, fire, or injury to persons:

1. Close supervision is necessary when this product is used by, on, or near children or invalids.
2. Use this product only for its intended use as described in this manual. Do not use attachments not recommended by HOROW.
3. Never operate this product if the cord or plug is damaged, if it is not working properly, or if it has been dropped, damaged, or immersed in water. If any of these conditions apply, contact our Customer Service Team directly.
4. Keep the cord away from heated surfaces.
5. Never block the air openings of the product or place it on a soft surface, such as a bed or couch, where the openings could be blocked. Ensure that the air openings remain free of lint, hair, and similar debris.
6. Never use while sleeping or drowsy.
7. Never drop or insert any object into any opening or hose.
8. Do not use outdoors or in environments where aerosol (spray) products are being used or oxygen is being administered.
9. Connect this product to a properly grounded outlet only.
   See **Grounding Instructions**.
10. Caution - Risk of electric shock. Do not remove the toilet lid (or back) on your own. Refer servicing to qualified service personnel.

Grounding Instructions

This product should be grounded. In the event of an electrical short circuit, grounding reduces the risk of electric shock by providing an escape wire for the electric current. The product is equipped with a cord that has a grounding wire and a grounding plug. The plug must be inserted into an outlet that is properly installed and grounded.

DANGER - Improper use of the grounding plug can result in a risk of electric shock.

1. If repair or replacement of the cord or plug is necessary, do not connect the grounding wire to either fat blade terminal. The wire within insulation having an outer surface that is green with or without yellow stripes is the grounding wire.
2. Check with a qualified electrician or serviceman if the grounding instructions are not completely understood, or if in doubt as to whether the product is properly grounded.
3. This product is factory equipped with a specific electric cord and plug to permit connection to a proper electric circuit. Make sure that the product is connected to an outlet having the same configuration as the plug.
4. No adapter should be used with this product. Do not modify the plug provided - if it will not fit the outlet, have the proper outlet installed by a qualified electrician. If the product must be reconnected for use on a different type of electric circuit, the reconnection should be made by qualified service personnel.

Explanation of Terms and Symbols

To ensure proper and safe use of this product, please read this section carefully before use. After reading, store this manual in a safe place for any needed future reference.

The hazards and warnings listed herein are important to our user's safety. Significant consequences may result from failure to heed warnings. The company will not be held liable for any injuries or damages caused by improper use or failure to follow the safety instructions.

Warning	Indicate possible injury resulting from improper usage due to negligence of this sign.
Attention	Indicate human injury or property loss that may result from improper usage due to negligence of this sign.
⚠	Indicate a strict request to follow noted precautions when used with the above "Warning" and "Attention" signs.
⃠	Prohibit any individual from performing any action with this symbol.
	Prohibit any individual from dismantling product.
	Keep product away from any wet environments, including, but is not limited to, humid environments, close proximities to baths, showers or sinks.

Do not touch!	Operate only as instructed!
Do not touch with a wet hand!	Pull out the power plug!
Keep away from any extreme heat or fire!	Protective grounding.

Warning

This product needs to be properly grounded.

※ Risk of electric shock.
※ If unsure, contact an electrician.

Do not place a lit cigarette along with other burning objects into the unit.

※ Risk of fire.

Do not touch, insert or pull out the power plug with a wet hand.

※ Risk of electric shock.

Do not use during thunderstorms (pull out the power plug during storms).

※ Failure in doing so may lead to injury or fault in the product.

Do not use a power socket in poor condition or a damaged power plug.

※ Risk of fire and/or electric shock.

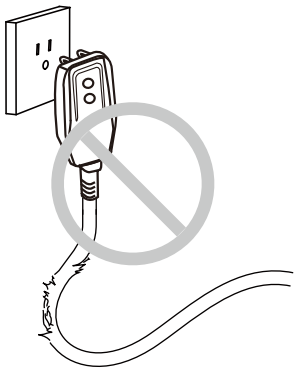

When the seat ring or the lid is damaged, to avoid any harm, be sure to pull off the power plug, close the water source and contact your local electrical installation company for replacement.

※ Risk of fire and/or electric shock.

The power socket in use should be within the specified range.

※ Risk of fire and/or electric shock.

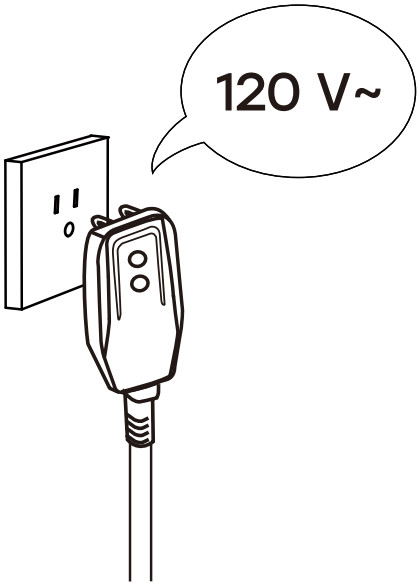

Regularly pull out the power plug and wipe off any dust on the power plug using a clean dry cloth.

※ Risk of fire.

Any person with a disability, the elderly, and children should be using this product with the supervision of another individual.

※ Be advised that sitting on the heated seat for an extended amount of time may result in burns.

Do not pull, damage, bend, twist, stretch, roll, bundle, clamp or squeeze the cord. Do not place anything on the cord.

※ Risk of fire and/or electric shock.

This product is not a toy. Advise children not to play with product.

※ Risk of injury.

If the power cord is damaged, to prevent any injuries or accidents, it should be replaced by a professional.

※ Risk of fire and/or electric shock.

Do not dismantle, repair or alter this product on your own. Call in a professional for further advice.

※ Risk of fire, electric shock, and/or other accident that may lead to injury.

For cleaning or maintenance of plastic parts, do not use any harsh cleaning agents. (These include, but are not limited to products such as concentrated sulfuric acid, concentrated nitric acid, glacial acetic acid, carbon tetrachloride, chloroform, benzene, phenol, methylphenol, dimethylformamide, methyl ether, soybean oil, acetate, 40% nitric acid, thick salt acid, 95% alcohol, gasoline, kerosene, etc.)

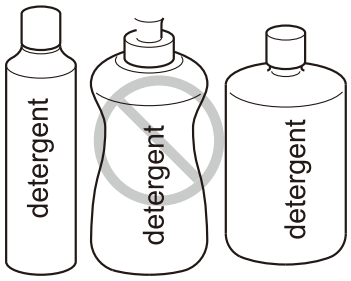

※ Risk of damaging parts that can lead to accidents and injuries.

Do not add water or detergent into the unit or onto the wireless remote control. Do not soak the product with water or cleaner.

※ Risk of fire and/or electric shock.

Do not install the product in a humid environment or a soaked room. Do not spray or soak this product with any form of liquid to prevent any damage to the product.

※ Risk of fire, electric shock, and/or other accident that may lead to user injury.

Do not use polluted water or water meant for industrial use.

※ Risk of cystitis and dermatitis.
※ Untreated water may also cause internal corrosion of the product and may cause electrical shock or a fire.

Do not apply any force to the unit's seat and lid. Do not stand on the lid or open or close the lid and the seat forcefully.

※ Risk of product damage and/or user injury.

Do not place your hand or any other object into the dryer trap, and do not cover the dryer and dryer trap during product use.

※ Risk of fire, electric shock and/or other accident that may lead to user injury.

Do not spray urine at the dryer.

※ Risk of electric shock.

⚠ Battery Warning

Read the following for proper battery usage.

① Properly install the battery according to its correct polarity.

② Remove the battery during long periods without use.

③ Replace the battery in time.
※ Failure to do so may result in interrupted control signals.

④ Cover the battery with tape before disposal. This will prevent battery fluid leaks that may cause fire and/or other damages.

⑤ Place the battery out of children and infant reach.
※ If battery is swallowed, contact a doctor immediately.

⑥ If battery fluid leaks onto user, quickly rinse off using clean water.

⑦ If battery fluid gets into eyes, do not rub your eyes. Quickly rinse it with clean water and consult a doctor immediately.
※ Failure to do so may result in vision impairment or blindness.

When the battery is in use, do not do the following operations:

① Do not hold or store with metal objects (such as a necklace or a watch).

② Do not mix new and old batteries.

③ Do not pull apart battery or throw it into water and/or fire. Battery fluids may cause a fire.

⚠ Attention

Do not use the heated seat or warm dryer temperature for an extended amount of time.

※ Extended use may result in burns.

Avoid direct sunlight or heat.

※ Risk of product discoloration.

While using this product, make sure that the skin is in contact with the seat sensor area. Otherwise, the product may not operate correctly.

※ Children and smaller individuals may have trouble staying in contact with sensor area.

Do not spray urine in the direction of the bidet nozzle.

※ Doing so may result in blockage to the bidet nozzles and cleaning area.

Do not supply electricity with an external switch, i.e., connecting the universal part to a timer switch.

※ Risk of problems caused by improperly resetting the thermal breaker.

Pull out the power plug when the product is in disuse for an extended amount of time. Make sure to shut off the water and remove the water inside the product.

※ Risk of fire, leakage and product damage.

When storing or transporting in cold climate, make sure to remove all water from the unit. Product may crack and other damages may occur due to freezing water.

※ Risk of fire, leakage and product damage.

In case of sudden power failure, pull out the power plug and turn off the angle valve to prevent water leakage.

※ Risk of water leakage and/or property loss.

Overall Sketch

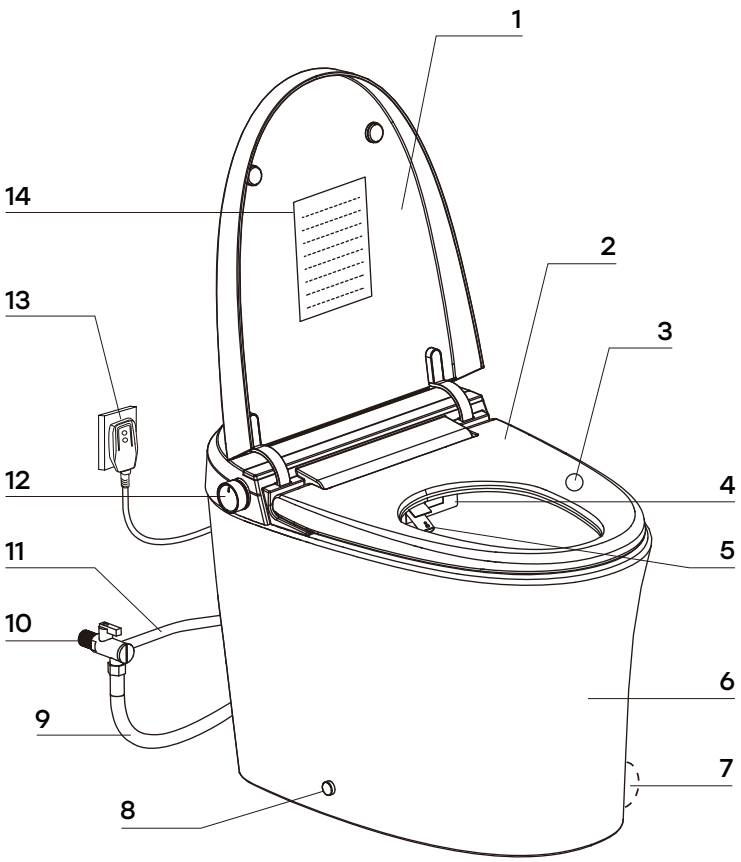

1	Lid
2	Heated Seat
3	Seat Sensor
4	Warm Dryer
5	Nozzle
6	Ceramic Toilet Bowl
7	Foot Sensor
8	Decorative Cap
9	Flush Water Hose
10	Angle Valve
11	Clean Water Hose
12	Knob
13	Power Plug (GFCI Plug)
14	Caution Label

Knob

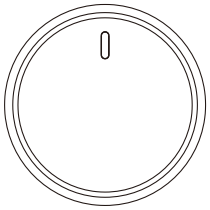

LED Digital Display

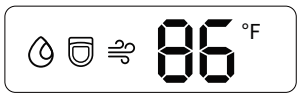

Remote Control

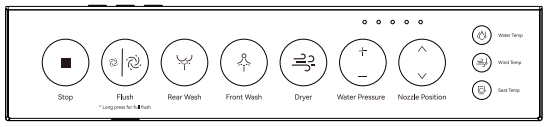

※ Two AAA batteries for the remote control and the 9 V battery for blackout flush are included in the product package.

Function Table

Category	Functions / Model	T36
Hygiene	Front Wash	●
	Rear Wash	●
	Movement Wash	●
	Pulse Massage	●
	Self-cleaning Nozzle	●
	Nozzle Clean	●
	UV Sterilization	●
	Easy-clean Glaze	●
	Pre-wet	●
Comfort	Instant Heating	●
	Adjustable Water Temperature	●
	Adjustable Water Pressure	●
	Bubble Wash (Water & Air Mixed)	●
	Adjustable Nozzle Position	●
	Heated Seat	●
	Adjustable Seat Temperature	●
	Warm Dryer	●
	Adjustable Dryer Temperature	●
	Auto Deodorization	●
Convenience	Auto Open Lid	●
	Auto Wash	●
	Auto Flush	●
	Drying Flush	●
	Blackout Flush	●
	Remote Flush	●
	LED Digital Display	●
	Remote Open Lid/Seat	●
	Kick Open Lid/Seat	●
	Night Light	●
	Energy-saving Mode	●
	Soft Close	●
	Factory Data Reset	●
Safety	SUS Filter	●
	Air Isolation & Backflow Prevention	●
	Multiple Protections	●
	Fire and Heat Resistant	●

Product Installation

Tools Needed for Installation

Please have these tools prepared prior to installation.

Drill
(Dia.: 1/4" & 3/8")

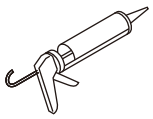

Caulk Gun

Teflon Tape

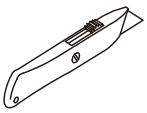

Knife

Spanner
(15/16" - 1", model varies for different pipes)

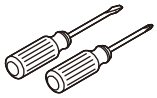

Screwdriver

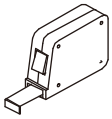

Measuring Tape

Marking Pen

Parts Included

Please confirm that all items below are inside the box.

Smart Toilet (1 pc)

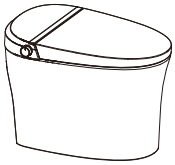

Angle Valve (1 pc)

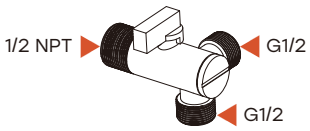

Adapter (1 pc)

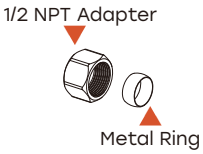

Remote Control Set (1 pc)

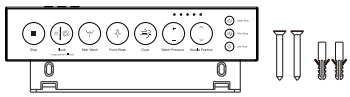

(Remote control & holder & screw set)

Installation Template (1 pc)

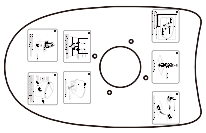

Installation & User Manual

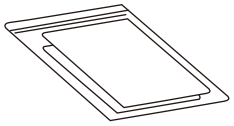

Wax Ring (1 pc)

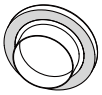

Battery

AAA battery
(2 pcs)

9 V alkaline battery
(1 pc)

Spare Battery Box

Floor Flange (1 pc)

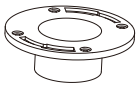

Mounting Accessory Kit:

- Expansion Bolt (4 pcs)
- Screw (4 pcs)
- Washer (2 pcs)
- Mounting Block (2 pcs)
- Toilet Screw (2 pcs)
- Nut (2 pcs)
- Fixing Sleeve (2 pcs)
- Bolt (2 pcs)
- Decorative Cap (2 pcs)

Prior to Installation

Please confirm that all the aforementioned items in the package are present. In case of any missing parts, please feel free to contact our Customer Service Team. Illustrations above are for reference only. The ceramic product may have slight deformation during the firing process. Please consult the actual product for accurate details.

Verify the product dimensions and secure enough installation space. The rough-in size refers to the distance between the center of the toilet flange to the finished back wall.

※ All dimensions are manually measured with a certain degree of error. For the specific size, please refer to the actual product received.

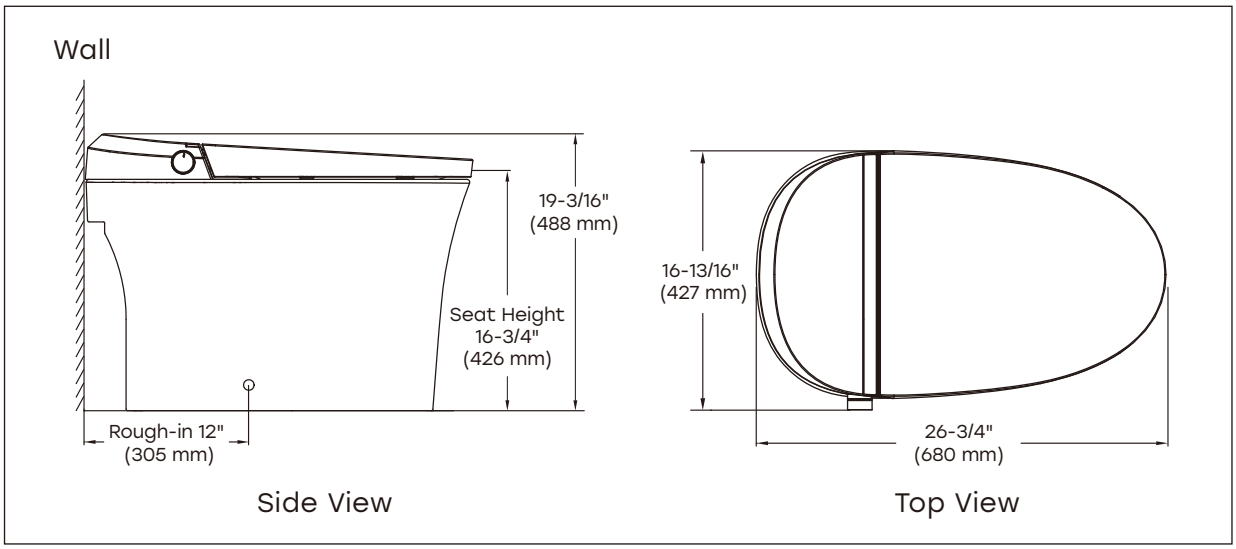

To ensure proper installation, the distance between the water supply valve and the centerline of the toilet should be greater than half the width of the toilet bottom. The water supply valve should be about 8" (203 mm) away from the toilet centerline. For larger valves, a greater distance may be necessary to ensure proper clearance. For easy installation and maintenance, a range of 9" (229 mm) to 11" (279 mm) is recommended.

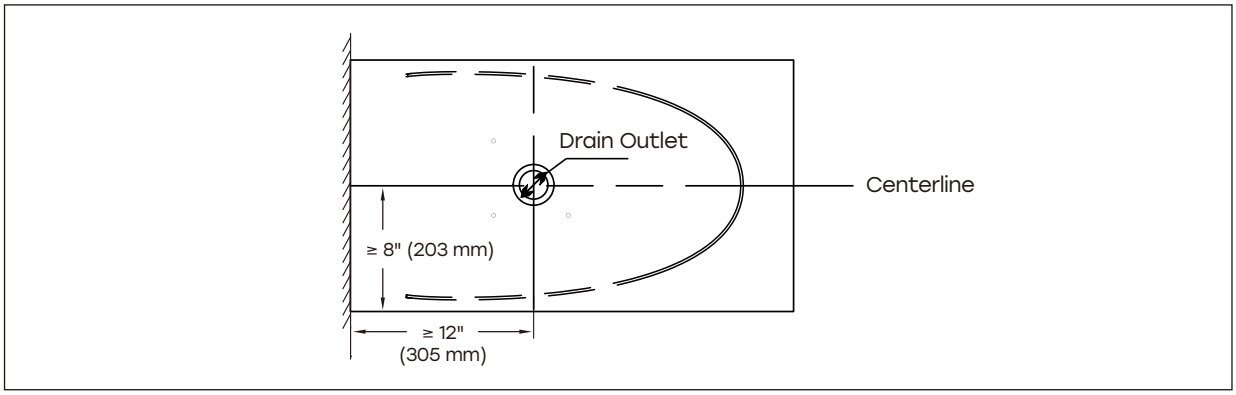

The minimum water pressure required is 13 psi, and the maximum water pressure is 116 psi. If the minimum water pressure is not met, the smart toilet may not achieve the optimal cleaning performance. However, since the product includes a built-in pump, its ceramic scouring effect is not affected by external water flow, pressure, or other environmental factors.

Electrical requirements for this product: 16 Amps at AC 120 V, 60 Hz.

Installation of Smart Toilet

Install your toilet using the following steps:

Please remove the old toilet first if any and ensure the mounting surface is clean and level before the new toilet is installed.

1 Open the box right side up

Remove the accessories first, then lift the toilet with two people, remove the packaging, and gently place the toilet on the floor, as shown in the diagrams below.

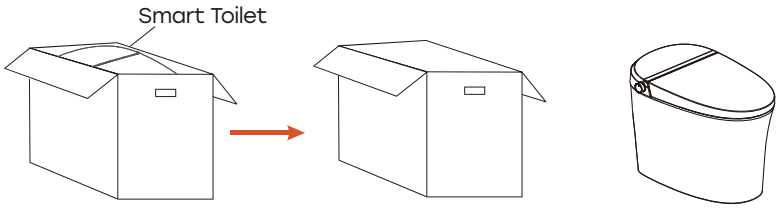

2 Install the angle valve

Turn off the water supply and the remove the existing supply stop valve.
Turn on the water supply and flush for 1 minute to clear any debris that may damage the toilet structure.
Turn off the water supply. Wrap Teflon tape around the threaded end of the water supply pipe to ensure a watertight seal. Screw the needed adapter onto the water supply pipe based on actual requirement.
Connect the angle valve to the water supply pipe, using a gasket to prevent water leakage.

※ If your water supply pipe is a copper pipe, you can use the adapter and the metal ring provided to let the copper match the angle valve.

※ For the joint assembly, tighten the threaded joint 1 ~ 2 turns beyond finger tight, ensuring not to overtighten.

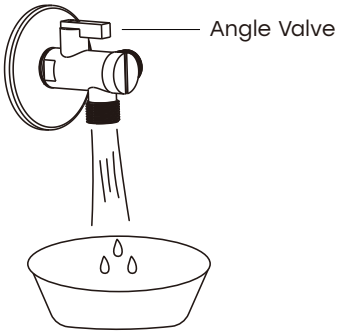

3 Install with installation template

Align the installation template with the centerline of drain outlet.

Mark four mounting holes on the ground based on the installation template with the marking pen. Then, outline the edges of the template to mark the toilet placement for later installation and remove the installation template.

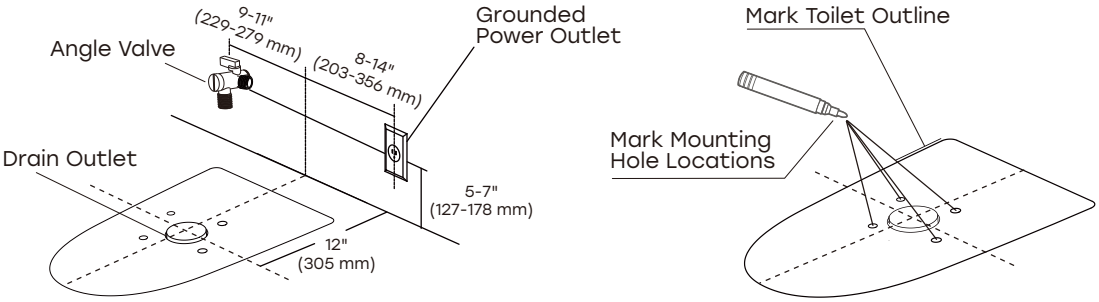

4 Install and fix the flange

Drill four 3/8" (10 mm) holes at the marked locations from the previous step. Insert four expansion bolts into the holes. Position the flange on the drain pipe outlet, aligning the four flange holes with the drilled holes on the ground. Then, insert the screws into the flange holes and tighten them using a screwdriver.

※ If an applicable flange is already in place, there is no need to install the new one.

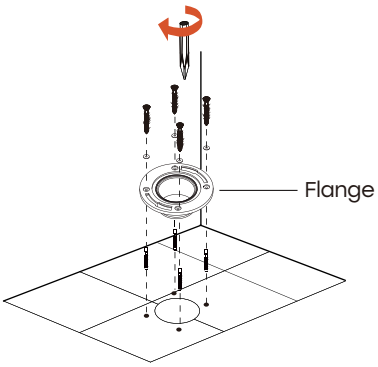

5 Install the mounting blocks

Install the bolts into the flange channels properly. Assemble the mounting blocks with bolts. Position the two mounting blocks on opposite sides of the flange on the ground and secure them with washers and nuts.

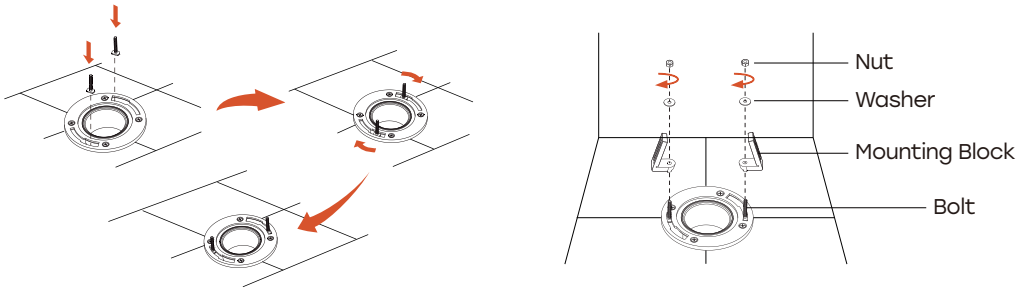

6 Install the ceramic toilet

Install the wax ring onto the drain hole at the bottom of the ceramic toilet and press it firmly into place.

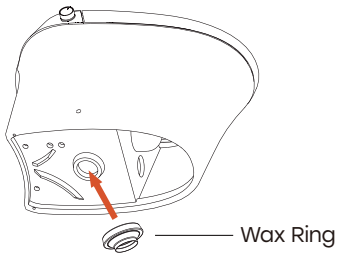

Lift the ceramic toilet with two people and gently lower it onto the flange, letting it well fit the mounting blocks.

Press down firmly on the ceramic toilet to ensure the wax ring forms a complete seal.

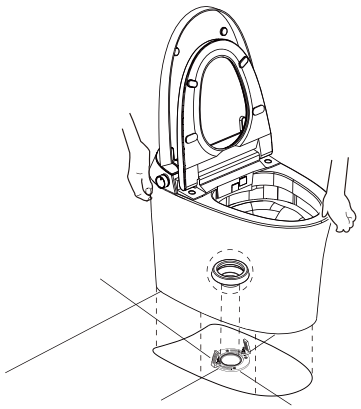

Insert the screw through the fixing sleeve, then through the holes on both sides of the ceramic toilet and into the mounting blocks on the ground. Tighten them securely using a screwdriver.

Put the decorative cap onto the fixing sleeve.

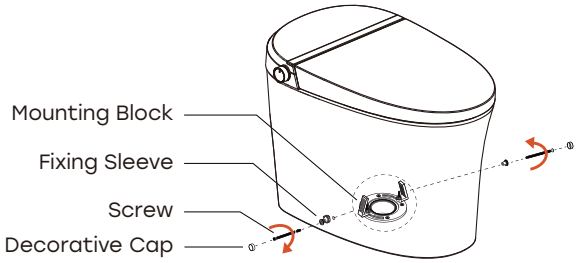

Tips:

※ The toilet is heavy, and it needs two people to carry it.
※ Please clean the drain outlet.
※ Please make sure ceramic toilet outlet sits perfectly on the drain outlet.

7 Install the water hoses

Connect the flush water hose and the clean water hose to the installed angle valve and tighten them separately.
Use Teflon tape on all threaded connections to ensure a watertight seal.

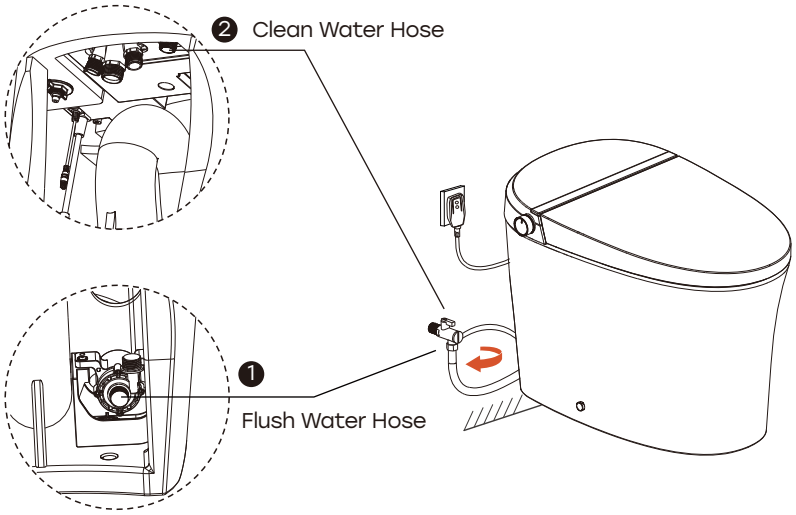

Installation of Battery Pack

The battery pack is primarily used for blackout flush in case of a power outage. It provides emergency power to the toilet. The battery box and the 9 V alkaline battery are included inside the product package. For any questions, please contact our Customer Service Team.

Install the battery box

Open the battery box and insert the battery provided into the battery box.
Locate and hold the connecting cable from the cavity behind the ceramic toilet.
Connect the battery pack to the connecting cable and put it into the cavity at the back of the toilet.

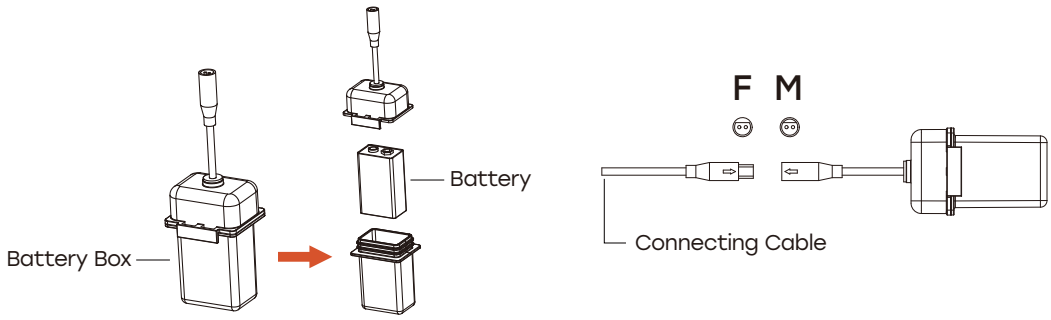

※ The battery should be placed out of the reach of children.

Replace the battery

Locate and hold the battery pack from the cavity behind the ceramic toilet and remove it from the connecting cable.
Open the battery box, take out the old battery, and insert a new one.
Reconnect the battery pack to the connecting cable and put it back into the original position.

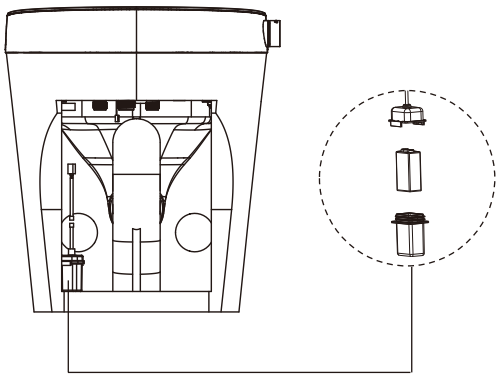

Installation of Remote Control Holder

There are two ways to install the remote control holder. Please select the one that best suits your needs.

Installation with screws

Drill two 1/4" (6 mm) holes in the wall (about 1-3/8" (35 mm) deep). Knock the expansion bolt into the hole with a hammer. Secure the holder with expansion bolts. Use the screws to secure the holder to the wall.

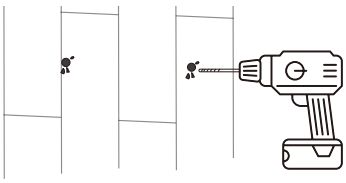

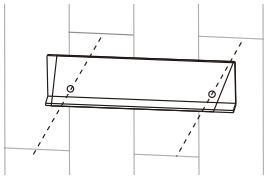

Remove the battery cover from the backside of the remote control to install batteries. Once finished, the remote control is ready to be placed in its holder.

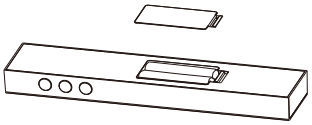

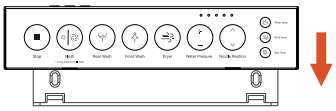

※ Please use proper mounting tools for special wall surfaces (such as wood, HDF, etc.)
※ The remote control holder should be installed away from the bidet's spray trajectory.
※ The remote control holder should be installed within reach when seated on the toilet.
※ Make sure there is nothing to block the transmission between the toilet and its remote control.

Installation with double-sided tape

Clean and dry the installation surface before mounting. Peel off the backing paper from the double-sided tape on the back of the remote control holder. Attach the holder to the wall, pressing the tape firmly and evenly.

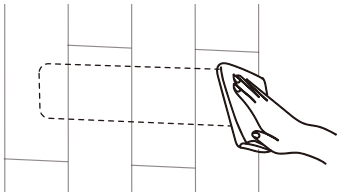

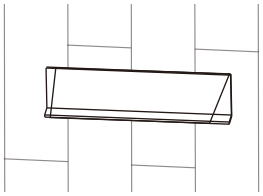

Remove the battery cover from the backside of the remote control to install batteries. Once finished, the remote control is ready to be placed in its holder.

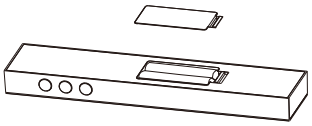

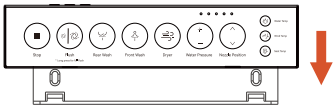

Product Test Run

1 Water Connection

Turn the water supply angle valve to the maximum opening, as shown in the diagram. Make sure no leakage is found at various connection parts.

※ In case of any water leakage, unfasten the nuts and install them again.

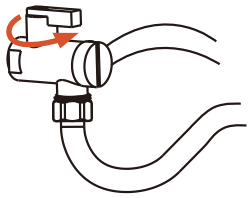

2 Power Connection

Ensure the electrical requirements are met: 16 A at AC 120 V, 60 Hz.
Plug the power plug into AC 120 V socket.
Press the knob on the toilet to start a flush and confirm the toilet is powered on.

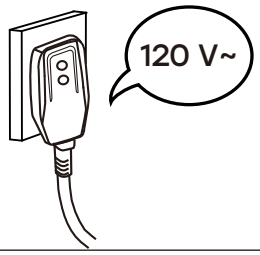

3 Smart Toilet Running

Are all functions working properly?
Test all function buttons on the remote control and the knob on the toilet.
Verify the normal operation of each function.
Operate the remote control and confirm the functionality of Front Wash, Rear Wash (including water pressure and nozzle position adjustment), Warm Dryer, Air Temperature and Water Temperature Adjustment, Nozzle Clean and Night Light.
All functions listed above should be tested. Please ensure all specified functions run correctly. Front wash, rear wash and warm air drying functions should be tested while the seat is occupied.

After the toilet is installed and the test run is completed, it is recommended that you apply the silicone sealant around the base of the toilet. Please avoid applying sealant where the access covers meet the floor.

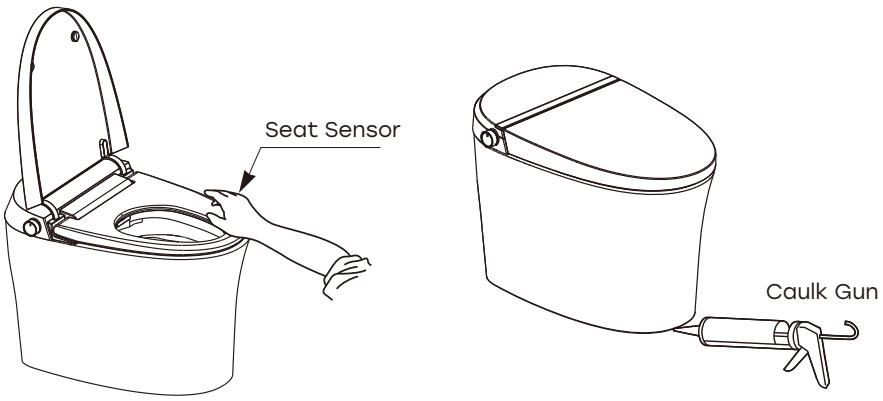

Usage Instructions

Function Explanations

Auto Flush

The toilet will automatically flush after the seat sensor no longer detects a user if no flush is performed during seat occupancy. If the seat is occupied for 10 ~ 30 seconds, a half flush will be triggered automatically. If the seat is occupied for over 30 seconds, a full flush will be executed.
Additionally, the toilet will automatically flush after a male user urinates with the seat raised.

Drying Flush

Press **Dryer** on the remote control to activate the dryer to blow warm air.
If no flush is executed after front or rear wash, a flush will be performed automatically to eliminate unpleasant odors before the dryer is activated.
Front/rear wash is not available during the flush process.

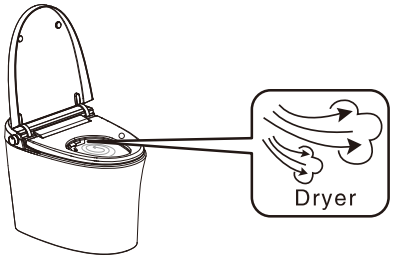

Blackout Flush

Blackout flush refers to the manual emergency flush during a power outage.
Press the knob to activate blackout flush.
If the above operation does not work properly, you need to replace the battery or contact our Customer Service Team.

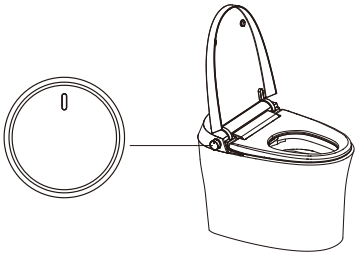

Microwave Induction

Microwave induction, also known as auto open/close lid, uses the microwave induction technology to detect users within a specified range.
The lid will automatically open when a user approaches within this range.
The lid will automatically close when the user leaves for a while and the sensor no longer detects any microwave signal.

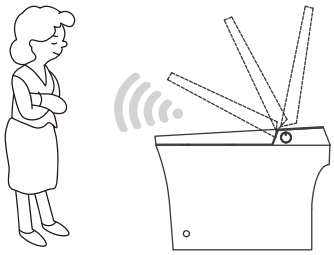

LED Digital Display

When different functions are activated, the corresponding function animation is displayed or the indicator light is on.

The icon indicates the cleaning water temperature. When adjusting the temperature, the icon lights up, and the current temperature is displayed.

The icon indicates the seat temperature. When adjusting the temperature, the icon lights up, and the current temperature is displayed.

The icon indicates the warm air temperature. When adjusting the temperature, the icon lights up, and the current temperature is displayed.

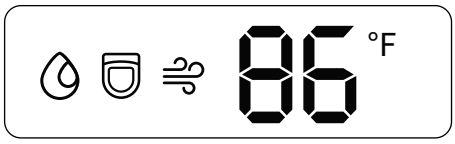

Auto Deodorization

The deodorization function will be activated automatically when the seat is occupied and will be turned off once the seat is unoccupied.
A deodorizer device is installed at the back of the toilet to help eliminate unpleasant odors and improve ventilation.

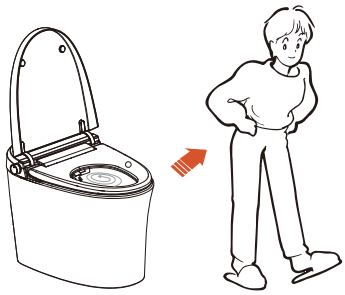

UV Sterilization

An ultraviolet lamp is installed and concealed inside the smart toilet. Ultraviolet rays sterilize the nozzle surface. UV sterilization will start automatically 30 seconds after the seat is unoccupied and it will work for 3 minutes. Pressing **Stop** or activating the seat sensor will stop the UV sterilization process.

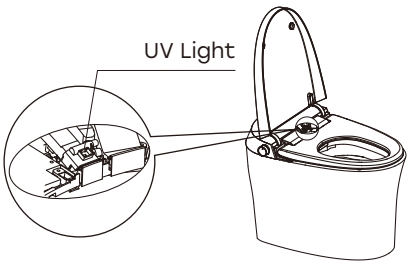

User-friendly Design

① **Pre-wet**
When the toilet seat is occupied, the product will flush automatically once towards the seat to moisten the toilet bowl.

② **Multiple Protections**
Multiple built-in safety features are designed to protect both the user and the product.

③ **Memory Mode**
The toilet automatically remembers and retains the last-used settings, including water temperature, seat temperature, warm air temperature, nozzle position and other user preferences. Such settings will revert to factory defaults in the event of a power failure.

④ **Energy-saving Mode**
When enabled, the toilet conserves energy by maintaining the water temperature, seat temperature and warm air temperature at Level 1.

Foot Sensor Operations

The toilet is equipped with a foot sensor, located as shown below, allowing you to open and close the lid and the seat, as well as activate the flush when the lid is closed.

Tap the sensor area with your foot to raise your toilet lid/seat.
Tap the foot sensor area once: Lid opens.
Tap the foot sensor area twice: Seat raises.
Tap the foot sensor area three times: Seat and lid will close and the toilet will flush immediately.

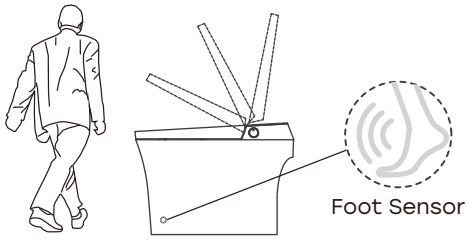

Knob Operations

Power/Stop

When the toilet is powered on and no one is seated, press and hold the knob for 5 seconds to enter the standby mode. Under this mode, the indicator light on the knob will flash every 5 seconds and all functions cannot run.
When the toilet is in standby mode, rotate the knob or press any button on the remote control to exit the standby mode.
When the toilet is in front/rear wash or drying mode, press the knob to stop the function.

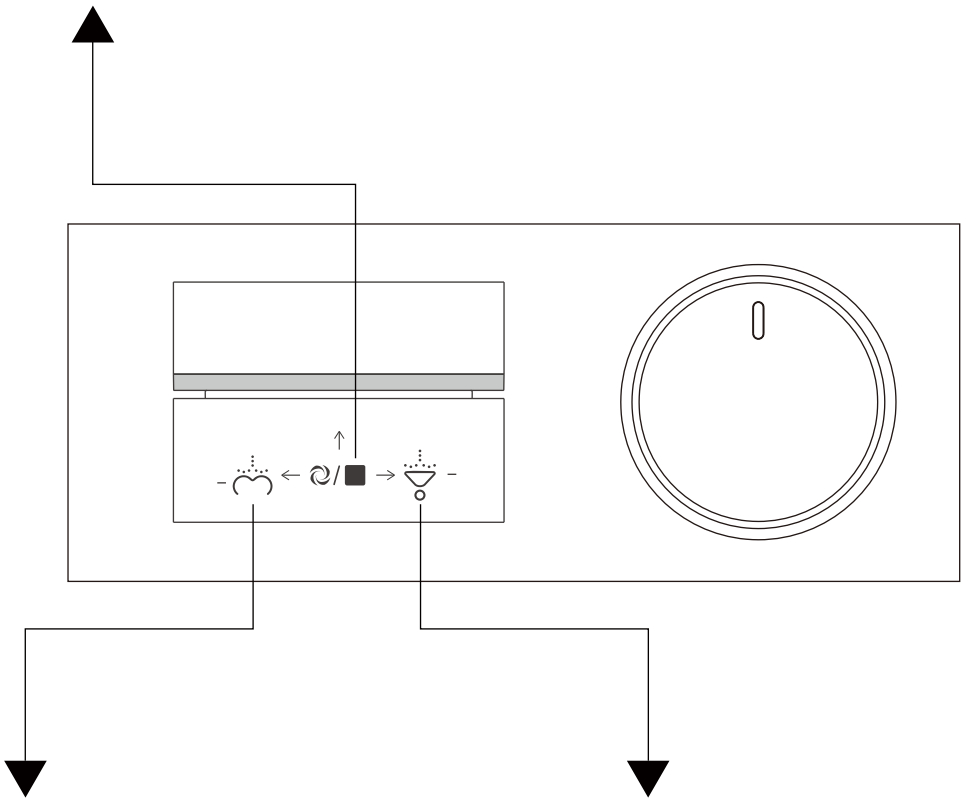

Rear Wash

Rotate counterclockwise

When the seat is occupied and the toilet is not in wash or drying mode, rotate the knob counterclockwise to start rear wash. It will automatically stop when the cycle ends. To stop it halfway, press the knob or press **Stop** on the remote control.

Front Wash

Rotate clockwise

When the seat is occupied and the toilet is not in wash or drying mode, rotate the knob clockwise to start front wash. it will automatically stop when the cycle ends. To stop it halfway, press the knob or press **Stop** on the remote control.

※ When the seat is unoccupied and the toilet is not in use, press the knob to immediately flush the toilet.

Remote Control Operations

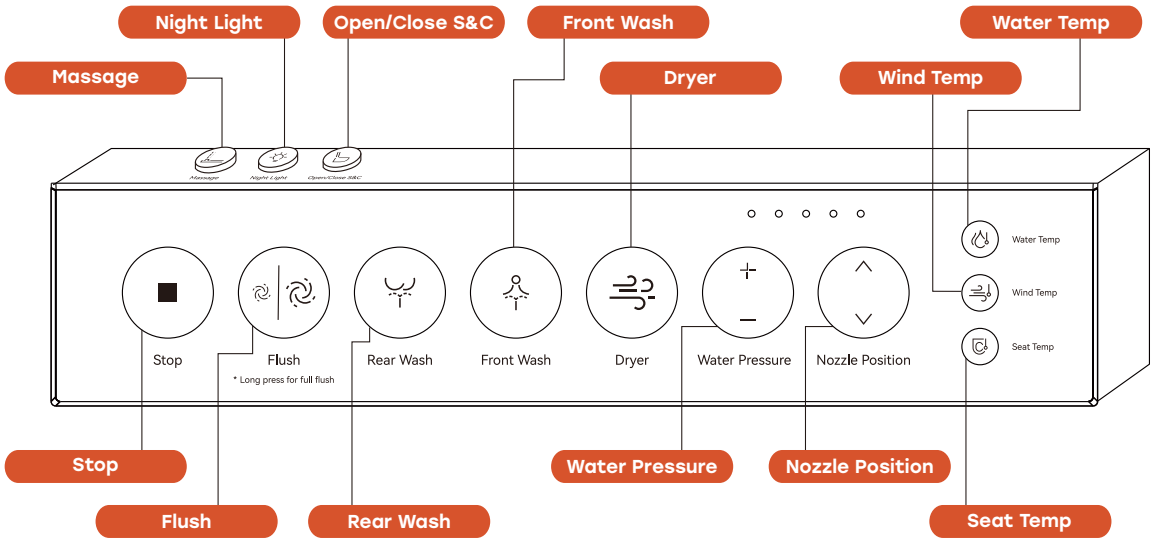

Press **Stop** to stop any activated wash functions (front wash or rear wash) or the dryer.

Press **Flush** to start a half flush.

Press and hold **Flush** for 3 seconds to start a full flush.

Press **Rear Wash** to start rear cleaning. Press again to activate movement wash, and press a third time to return to rear wash.

Press **Front Wash** to start feminine cleaning. Press again to activate movement wash, and press a third time to return to front wash.

Press **Dryer** to dry off the water after using the wash function.

Press **Water Pressure** to adjust the cleaning intensity of front wash and rear wash. Five levels are available. Press **+** to increase one level and press **–** to reduce one level. Corresponding level lights on the remote control will illuminate.

Press **Nozzle Position** to adjust the nozzle position during cleaning. Five levels are available. Press ∧ to extend the nozzle forwards and press ∨ to retract the nozzle backwards. Corresponding level lights on the remote control will illuminate.

Press **Water Temp** to adjust the water temperature for any wash function. Six levels are available. When set to the Off position, the water flows at ambient temperature and all level lights remain off.

Press **Wind Temp** to adjust the warm air temperature of the dryer during drying. Six levels are available. When set to the Off position, the dryer blows the warm air at ambient temperature and all level lights remain off.

Press **Seat Temp** to adjust the heated seat temperature while seated. Six levels are available. When set to the Off position, the seat remains at ambient temperature and all level lights are off.

Press **Massage** on the top of remote control to activate pulse massage mode during rear or front wash. The water pressure will automatically alternate between strong and gentle settings for a more comfortable cleaning experience.

Press **Night Light** on the top of remote control to turn the night light on or off.

Press and hold **Night Light** on the top of remote control for 5 seconds to turn on or off the indicator light of the knob.

Press **Open/Close S&C** on the top of remote control to remotely control auto open/close of the lid and the seat.

Press and hold **Stop** and **Rear Wash** simultaneously to start manual nozzle cleaning. The nozzle will extend out, allowing the user to clean it manually.

Press and hold **Stop** and **Front Wash** simultaneously to start automatic nozzle cleaning. The nozzle will extend and retract automatically for automatic cleaning.

• Other Settings

Note: The following automatic functions can be enabled or disabled based on your using habit. To make adjustments, please follow the steps below to enable or disable these functions.

A short beep indicates that the function has been enabled, while 2 short beeps indicate that the function has been disabled.

Press and hold **Stop** and **Dryer** simultaneously to enable/disable the Do Not Disturb function.
※ When enabled, no audio prompts will be heard during knob and remote control operations.

Press and hold **Night Light** and **Open/Close S&C** for 5 seconds simultaneously to enable/disable the microwave induction function (auto open/close lid)

Press and hold **Rear Wash** to enable/disable the pre-wet function.

Press and hold **Stop** and **Flush** to enable/disable the auto flush function after men urinate.

Press and hold **Flush** and **Rear Wash** to enable/disable the auto flush function after the human leaves the seat.

Press and hold **Water Pressure** + and **Nozzle Position** ^ to enable/disable the auto flush function after the lid is closed.

Press and hold **Stop** to enable/disable the energy-saving mode.
※ When enabled, the toilet conserves energy by maintaining the water temperature, seat temperature and warm air temperature at Level 1. During this mode, these temperatures cannot be adjusted manually. Once the energy-saving mode is disabled, the temperatures will return to their previous settings.

Press and hold **Wind Temp** to enable/disable the auto deodorization function.

Code Pairing of Remote Control

The remote control is pre-paired with the smart toilet at the factory for immediate use. However, if the remote control isn't functioning properly, or if you own multiple toilets of the same brand and experience interference when operating them, you can manually pair the remote control with the toilet.

Unplug the toilet. Press and hold **Front Wash** for a few seconds until five level lights flash simultaneously.

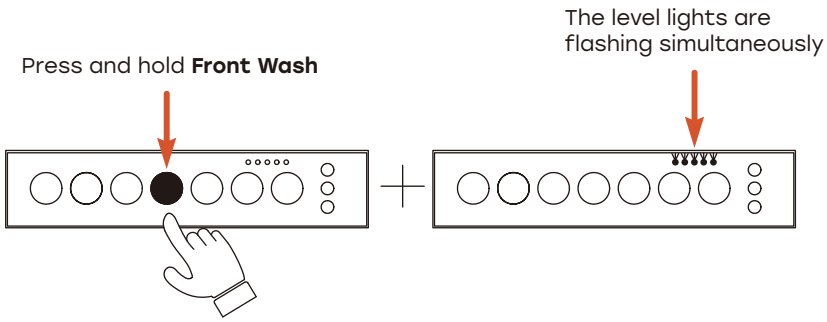

Plug the attaching plug and press the reset button on the power plug. Wait until the indicator light on the knob flashes alternately in red and green, then press the knob.

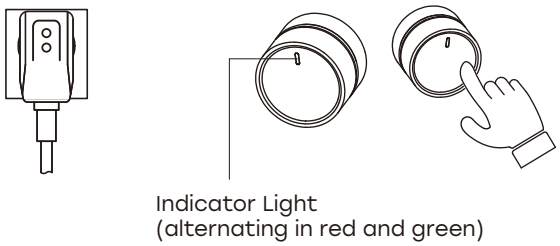

Codes are paired successfully when a beep sound is heard. Press **Stop** on the remote control to exit code paring.

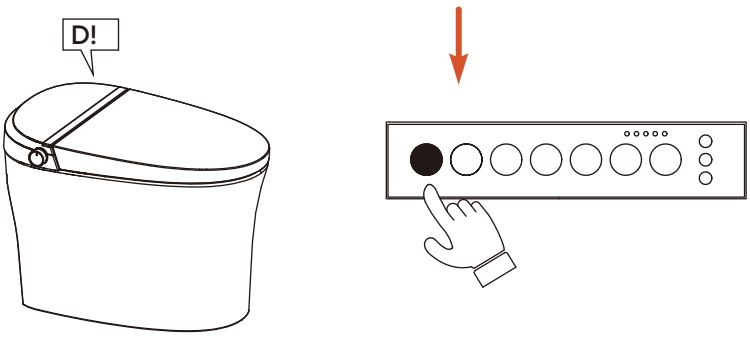

Daily Maintenance

Regular maintenance is required to ensure normal use.

Note:

1. Cut off the power and water supply before maintenance.
2. Direct water wash to the entire product is prohibited.

Warning:

Do not spray water or detergents on the toilet, remote control or the power cord. Doing so may cause electric shock or fire.

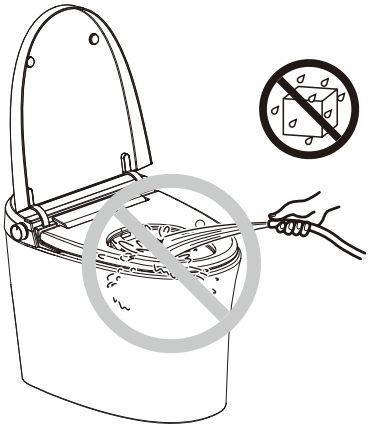

Maintenance of Ceramics, Seat and Lid

1. Wipe dust or stains with a soft wet cloth.
2. A wet soft brush, cloth, or sponge may be used to clean the ceramic area.

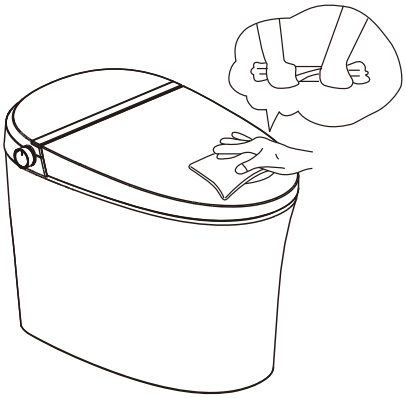

※ Do not use abrasive cleaners, such as alcohol, bleach, painter thinner, cresol, benzene, gasoline, etc.

Maintenance of the Nozzle

Nozzle Manual Cleaning

Press and hold **Stop** and **Rear Wash** simultaneously on the remote control to enter the manual cleaning mode. The nozzle will extend to its longest position and continuous water will flow out for self-cleaning for 10 minutes. During this process, you can clean the nozzle manually with a soft wet cloth or a soft toothbrush.
When 10 seconds remain, the buzzer will beep 10 times as a countdown signal. The cleaning process will automatically end after the cycle is complete and the nozzle will retract automatically.
Also, you can press **Stop** on the remote control or press the knob to exit the manual cleaning mode and the nozzle will retract automatically.

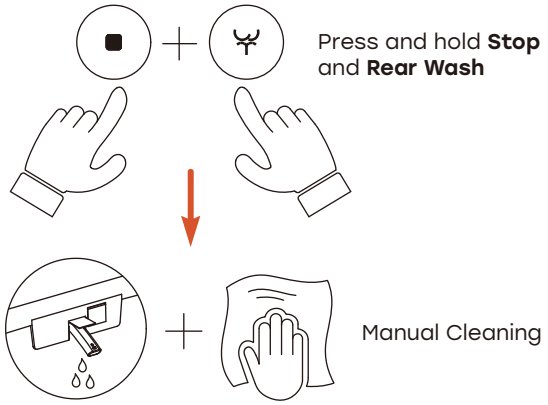

Nozzle Automatic Cleaning

Press and hold **Stop** and **Front Wash** simultaneously on the remote control to enter the automatic cleaning mode. The nozzle will extend and retract automatically for a total of 10 cleaning cycles. Manual cleaning is strictly prohibited during this process.
The cleaning process will automatically end after the cycle is complete and the nozzle will retract automatically.
Also, you can press **Stop** on the remote control or press the knob to exit the automatic cleaning mode and the nozzle will retract automatically.
Once the seat is occupied, the automatic cleaning will stop.

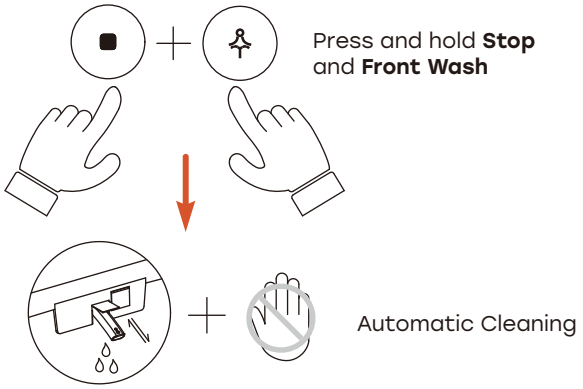

Cleaning of the Filter

If the water pressure is too low or insufficient, please clean the filter.
Turn off the angle valve to stop the water supply.
Use a flathead screwdriver to rotate the filter cover counterclockwise to remove the filter.

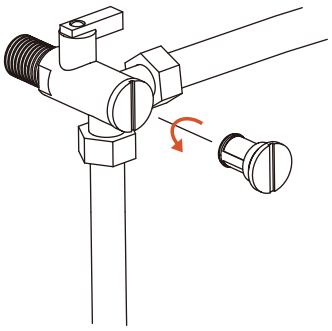

Clean the filter thoroughly. You can rinse off dirt or gently clean it with a toothbrush.

※ Do not use any cleaning agents. Clean the filter with water only.
※ Be careful not to crush or distort the filter while cleaning.

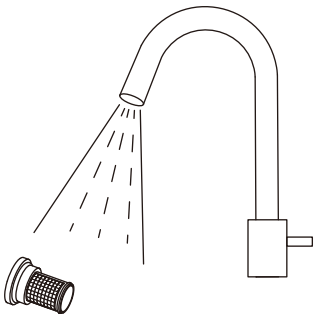

Reinstall the filter in the reverse order of removal.
After installation, open the angle valve and check for any water leakage.

Maintenance During Winter Season

During the winter season, the water inside may freeze after long periods of storage and non-use. Please take measures to prevent.

Note:

※ Before connecting the product to the water supply and electrical outlet, allow it to defrost for 30 minutes in a warm indoor environment.

※ In cases of extreme cold/freezing/nozzle stuck in place, wrap the water input line with a warm towel. Never pour hot water or use a hot dryer directly on the toilet.

Troubleshooting

This Troubleshooting Guide is for general aid only. If the user encounters any problems, please first consult the troubleshooting guide below. If the problem persists, please contact our Customer Service Team.

Scan the QR code for video resources and find the troubleshooting videos you need.

Complete Machine

Phenomenon	Fault Diagnoses	Solutions
Not working	Whether the power supply is off	Power on
	Whether the leakage protector is off	Press the leakage switch again
	Power failure or not	Wait for power supply

Front/Rear Wash

Phenomenon	Fault Diagnoses	Solutions
Not working	Whether the water supply switch is on	Turn on the water supply switch
	Whether the water supply is cut off	Wait for water supply to recover
	Whether the orifice is blocked by foreign matters	Remove foreign matters and manually clean the nozzle
	No skin contact with seat sensor	Re-adjust sitting position to ensure skin contact with sensor
Low water pressure	Whether the water pressure is set to low level	Regulate the water pressure according to the Installation & User Manual
	Whether the water supply channel is normal	Clean the filter screen at the water supply outlet and supply water again
Low water temperature	Whether the water temperature is set to low level	Regulate the water temperature according to the Installation & User Manual
Stop water halfway	Whether the automatic stop time is exceeded	Start the wash function again
	No skin contact with seat sensor	Re-adjust sitting position to ensure skin contact with sensor

Warm Air Dryer

Phenomenon	Fault Diagnoses	Solutions
Low heating temperature	Whether the warm air temperature is set to low level	Regulate the warm air temperature according to the Installation & User Manual
Stop halfway	Whether the automatic stop time is exceeded	Start the dryer again
	No skin contact with seat sensor	Re-adjust sitting position to ensure skin contact with sensor

Heated Seat

Phenomenon	Fault Diagnoses	Solutions
Insufficient seat temperature	Whether the seat temperature is set to low level	Regulate the seat temperature according to the Installation & User Manual

Deodorization

Phenomenon	Fault Diagnoses	Solutions
Deodorization device is not working	No skin contact with seat sensor	Re-adjust sitting position to ensure skin contact with sensor

Remote Control

Phenomenon	Fault Diagnoses	Solutions
No reaction	Whether some objects cover the rear part of the toilet lid	Remove the objects
	Incorrect usage angle and sensing distance	Adjust usage angle and distance
	Batteries run out	Replace with new batteries

Fault Code

Category	Fault Classification	Fault Location	Cause	Symptoms	Solutions	Fault Alarm	Fault Code
1	Complete machine failure	Random	Multiple sensors have failed	The toilet does not work properly	The fault is resolved after the toilet works normally	All lights flash and the buzzer sounds for 3 seconds	EE
2	Instant heating module	Abnormal communication	Abnormal signal of instant heating plate	Water stops heating and cleaning stops	The fault is resolved after communication recovery	All lights flash and the buzzer sounds for 3 seconds	E1
3	Flow	Water is still running after the function is stopped	The water pressure is too high, or the solenoid valve fails to close properly	Water continues to flow from the nozzle even after the front or rear wash has stopped	The fault is resolved after the water pressure is reduced to the required range or once the solenoid valve can open and close properly	All lights flash and the buzzer sounds for 3 seconds	E2
4		Inlet flow	The flow meter has no flow after the inlet valve is opened	The water stops heating but other functions work properly	The fault is resolved after water flow recovery	All lights flash and the buzzer sounds for 3 seconds	E3
5	Motorized damper	Motorized damper is stuck	The toilet lid is obstructed and cannot open properly	Lid open function does not work properly	Check why the lid open function is obstructed and the fault is resolved after the lid can open and close properly	All lights flash and the buzzer sounds for 3 seconds	E4
6	Knob	Knob does not respond	No response when the knob is turned counterclockwise	Rear wash does not work and the knob light flashes	The fault is resolved after knob recovery	The three-color light on the knob flashes in turn, and the buzzer sounds for 3 seconds	E5
7			No response when the knob is turned clockwise	Front wash does not work and the knob light flashes	The fault is resolved after knob recovery	The three-color light on the knob flashes in turn, and the buzzer sounds for 3 seconds	E6
8			No response when pressing the knob	The stop function does not work and the knob light flashes	The fault is resolved after knob recovery	The three-color light on the knob flashes in turn, and the buzzer sounds for 3 seconds	E7
9	Water temperature	Inlet NTC	Water inlet NTC open circuit or short circuit	Water stops heating and cleaning stops	The fault is resolved after NTC recovery	The water temperature indicator flashes and the buzzer sounds for 3 seconds	A1
10		Inlet NTC	Inlet water temperature > 107.6 °F, or whether a hot water pipe is connected to the toilet	Water stops heating and cleaning stops	The fault is resolved after temperature recovery	The water temperature indicator flashes and the buzzer sounds for 3 seconds	A2

Category	Fault Classification	Fault Location	Cause	Symptoms	Solutions	Fault Alarm	Fault Code
11	Water temperature	Inlet NTC	Outlet NTC open circuit or short circuit	Water stops heating and cleaning stops	The fault is resolved after NTC recovery	The water temperature indicator flashes and the buzzer sounds for 3 seconds	A3
12		Inlet NTC	Inlet water temperature > 107.6 °F, or whether the nozzle is blocked	Water stops heating and cleaning stops	The fault is resolved after temperature recovery	The water temperature indicator flashes and the buzzer sounds for 3 seconds	A4
13		Inlet NTC	Inlet water temperature is the same as outlet water temperature (no temperature rise)	Water stops heating and cleaning stops	The fault is resolved after temperature recovery	The water temperature indicator flashes and the buzzer sounds for 3 seconds	A5
14	Warm air temperature	Warm air temperature NTC	Warm air temperature NTC open circuit or short circuit	Dryer stops heating	The fault is resolved after temperature recovery	The warm air temperature indicator flashes and the buzzer sounds for 3 seconds	C1
15			Warm air temperature NTC > 149 °F	Dryer stops heating	The fault is resolved after NTC recovery	The warm air temperature indicator flashes and the buzzer sounds for 3 seconds	C2
16			No temperature rise	Dryer stops heating	The fault is resolved after temperature recovery	The warm air temperature indicator flashes and the buzzer sounds for 3 seconds	C3
17	Seat temperature	Seat temperature NTC	Seat temperature NTC open circuit	Seat temperature stops heating	The fault is resolved after temperature recovery	The seat temperature indicator flashes and the buzzer sounds for 3 seconds	H1
18			Seat temperature NTC > 107.6 °F	Seat temperature stops heating	The fault is resolved after NTC recovery	The seat temperature indicator flashes and the buzzer sounds for 3 seconds	H2

Note:

If you have any problem, please contact our Customer Service Team.

Specifications

Product Model		HOROW T36
Product Dimensions		26-3/4" (L) * 16-13/16" (W) * 19-3/16" (H)
Product Weight (lb.)		85.98 lb
Rough In Size		12"
Seat Height		16-3/4"
Bowl/Seat Shape		Elongated
Flush Type		Jet Siphon
Gallons Per Flush (US gallon)		Dual Flush: 1.08/1.45
Installation Type		Floor-mount
Rated Voltage		120 V~
Rated Frequency		60 Hz
Rated Power		1240 W
Power Cord Length		35-7/16"
Water Supply Type		DN15 (G1/2)
Water Inlet	Inlet Water Temperature	41 °F ~ 104 °F
	Minimum Pressure	13 psi, ensuring a flow of water at least 4.5 GPM
	Maximum Pressure	116 psi (static state)
Cleaning	Way for Heating	Instant Heating
	Water Heating Power	1300 W
	Temperature of Warm Water	Off/about 86 °F ~ 100.4 °F (6 levels)
	Safety Devices	Thermostat series, thermal fuse, flow detection device
Dryer	Dryer Heating Power	250 W
	Warm Air Temperature	Off/about 86 °F ~ 122 °F (6 levels)
	Minimum Air Volume	0.2 m^3/min
	Safety Devices	Bimetal thermostat series, thermal fuse
Heated Seat	Seat Heating Power	40 W
	Seat Temperature	Off/about 86 °F ~ 100.4 °F (6 levels)
	Safety Devices	Thermal fuse, temperature sensor
Remote Control Battery		Two AAA batteries
Blackout Flush Battery		One 9 V alkaline battery

Warranty

ONE YEAR LIMITED WARRANTY

HOROW products are made with high-quality materials and workmanship to provide customers with products that are built to last. If any defects in material or workmanship are detected during normal use within the first year of purchase, such as the replacement of any product or product part that you consider to be defective, HOROW will provide replacement parts free of charge. We are **not responsible** for all damages that result from **improper installation resulting in unavailability**, **repair and maintenance**. This warranty applies only to the original purchaser. Proof of purchase and **evidence of damage** will be required in the case of a **claim**.

HOROW recommends the installations to be made by a licensed, professional plumber.

HOROW will not be held responsible for any damage or product failure due to improper installation, misuse, or failure to use a licensed professional. HOROW is not responsible for any removal or installation cost.

This One Year Limited Warranty will be voided if:
The installation recommendations were not followed.
The product has been moved from its initial place of installation.
The product has been modified.
The product has been subjected to improper maintenance, abuse, misuse, excessive use of chemicals, accident or other damages.

HOROW makes no implication that products comply with any or all local building or plumbing codes. It is the consumer's responsibility to determine local code compliance. This warranty extends to the original purchaser and first consumer.

HOROW is not liable for any incidental, consequential or special damages associated with the return, replacement, installation or use of your product. This includes freight costs, labor, travel time, lost profit, home damages and other contingent liabilities and costs (including, without limitation, costs associated with experts, investigations, analyses, attorneys and other professionals and services).

The HOROW warranty is a comprehensive and explicit limit of liability, and all items outside of it are not addressable by or the responsibility of HOROW. Certain states have variances regarding implied warranties and in those situations, we remain fully compliant.

Warranty Registration

Proof of purchase is required to validate this limited warranty. HOROW encourages you to register your product upon purchase to create a record of ownership at www.horow.com. Registration is voluntary and not required to maintain your limited warranty rights.

For any questions or claims, please contact us by phone or email.

Phone: (+1)209-200-8033 **Monday to Friday**

Email: support@horow.com

When making a claim, please prepare a photo of the evidence of damage so that we can quickly resolve the claim for you.

Warning

Content may contain sharp and other possibly harmful pieces and may cause hazard to children and adults, HOROW is not responsible in any way for personal damage.